TECHNICAL MANUAL and INSTALLATION INSTRUCTIONS

# VD-99-00182-1 SLOPING VEE ANTENNA SYSTEM

***VTM-00-009 Rev C***

**Valcom Manufacturing Group, Inc.**

175 Southgate Drive, P.O. Box 603,Guelph,Ontario, Canada N1H6L3 Tel:519-824-3220 Fax: 519-824-3411

Web Site: www.valcommfg.ca E-mail: enquiries@valcom-guelph.com

## REVISION SHEET

| Revision | Description | Date |
|---|---|---|
| A | Original Issue | October 30, 2000 |
| B | - Added mast kit details<br>- Minor formatting changes | July 11, 2011 |
| C | - Revised details on improved mast kit | August 23, 2011 |
| | | |
| | | |

## TABLE OF CONTENTS

**1.0 INFORMATION**
1.1 GeneralDescription....1
1.2 Technical Reference Data....1
1.3 Electrical Description....2
1.4 Mechanical Description....2
1.5 Scheduled Maintenance....2
1.6 Corrective Maintenance....2

**2.0 INSTALLATION**
2.1 Unpacking....3
2.2 New Site Preparation....3
2.3 Assembly and Raising....4
2.3.1 Directional Setup....4
2.3.2 Omni-Directional Setup....6

**3.0PARTS LIST**
3.1General....8
3.2Additional Materials Required....8

**4.0QUICK REFERENCE DATA**
4.1 General....10
4.2 Manufacturer's Address....10

**LIST OF TABLES AND FIGURES**

Table 1.1 : Electrical Properties....1
2.Table 1.2 : Mechanical Properties....1
Figure 2-1 : Drain-hole location....4
4.Table 3.1 : List of parts for the Sloping Vee Antenna System....8
5.Figure 3-1 : Illustration of items in Table 3.1....9
6.Figure 4-1 : Recommended Directional Configuration....11
Figure 4-2 : Detail of Load Connection....12
Figure 4-3 : Detail of Balun Connection....12
9.Figure 4-4 : Detail of Mast Assembly....12
10.Figure 4-5 : Recommended Omni-Directional Configuration....13
11.Figure 4-6 : Detail of Insulator Connection....14
12.Figure 4-7 : Detail of Balun Connection....14
13.Figure 4-8 : Detail of Load Connection....14
14.Figure 4-9 : Typical VSWR plot....15

# 1.0 INFORMATION

## 1.1 General Description

The Valcom Model VD-99-00182-1 Sloping Vee Broadband Antenna is designed for operation from 1.8 MHz to 30 MHz. The antenna comes fully assembled and pre-tuned, no measuring or cutting is required. A counterpoise wire is supplied for employment where ground conditions are poor (see installation instructions for details). This antenna is all weather rated at 500W, 1 kW PEP CW/SSB ICAS1, and permits full use of the capabilities of today's continuous coverage transceivers. An added feature is single feedline operation for the entire band.

## 1.2 Technical Reference Data

| Table 1.1 Electrical Properties | |
|---|---|
| **Frequency Range** | 1.8 MHz to 30 MHz |
| **Power Rating** | 500 W Average, 1 kW Peak |
| **Polarization** | Horizontal and Vertical Simultaneously |
| **Radiation Pattern, Azimuth** | Bi-directional or Omni-directional |
| **Input Impedance** | 50 ohm(nominal) |
| **VSWR** | < 2 : 1 |
| **Feedpoint Connector** | Female N-type |

| Table 1.2 Mechanical Properties | |
|---|---|
| **Typical Assembled Height** | 25 feet (7.6 metre) |
| **Typical Assembled Dimensions** | 105ftx25ftx 25 ft (32 m x 7.6 m x 7.6 m) |
| **Weight** | 43 lbs (19.5 kg) |
| **Erection Time** | 20minutes, two persons |
| **Volume (for storage)** | 3.4 cu ft (0.10 m3) |

## 1.3 Electrical Description

The Sloping Vee Antenna is fabricated with #14 AWG stranded copper-clad stainless steel wire. It features a high impact resistant balun and matching network. The feedline impedance of the antenna is 50 ohm and comes equipped with an N-type (female) coax cable connector. The antenna is generally mounted in an inverted vee configuration. With the centre of the antenna rising up to 25 feet off the ground, approximately 100 linear feet of space and a 50 foot diameter area around the mast, is all that is required for installation. With the balun at one end of the wire, close to ground level and the terminating resistor at the other end of the wire, close to ground, a slightly bi-directional radiation pattern results. An alternative installation method is to mount the balun at the top of the mast with the terminating resistor centred near the mast and close to ground level. An omni-directional radiation pattern results from this setup.

## 1.4 Mechanical Description

The antenna is comprised of 112 feet of antenna wire, 112 feet of counterpoise, a high-impact resistant balun and a rugged terminating resistor. When assembled in the recommended fashion, the antenna has a 25 foot height and runs about 105 feet long. The mast is guyed with 3 ropes located at two locations along the mast and spans out 25 feet from the mast to create a 50 foot installation diameter.

## 1.5 Scheduled Maintenance

The antenna is virtually maintenance free. Care should be taken not to bend or kink the antenna wire or counterpoise when installing or packing antenna.

## 1.6 Corrective Maintenance

Generally, no corrective maintenance is possible or required. If one of the components of the antenna are severely damaged, it must be replaced by a new component or have the antenna replaced completely.

## 2.0 INSTALLATION

### 2.1 Unpacking

The Sloping Vee antenna is packaged within a series of plastic bags all contained within a canvas duffel bag. Remove all items from the bags and ensure all items are present and in good condition. A list of supplied materials is found in Table 3.1.

### 2.2 New Site Preparation

**WARNING**

Outdoor antennas and lead-in conductors from antenna to building shall not cross over electric light or power circuits and shall be kept well away from all such circuits so as to avoid the possibility of accidental contact. Where proximity to electric light or power service conductors of less than 250 volts can not be avoided, the installation shall be such so as to provide a clearance of at least 2 feet. Where practical, antenna conductors shall be installed so as to not cross under electric light or power conductors.

Determine how and where the antenna will be installed. Study all of the illustrations (Figures 4-1 to 4-8) to determine which installation best fits your individual requirements. Trees, sides of buildings, utility poles, etc. make good supports. Supports may be conductive such as a metal pole, but be certain to use insulators to keep the antenna wire from making contact.
The antenna may be set up in shapes other than those shown, or shortened, with minimal effect on the bandwidth. However, the radiation efficiency at the lower frequencies will be reduced somewhat.

DO NOT INSTALL PARALLEL TO POWER LINES.

For directional applications, the maximum gain of the antenna will generally be in the direction from the balun to the resistor. When the bearing of the intended receiver is known, care should be taken to orient the antenna in this direction this is me.

## 2.3 Assembly and Raising

When installing the antenna, ensure that the drain holes of the balun and matching network are facing down. Refer to Figure 2-1.

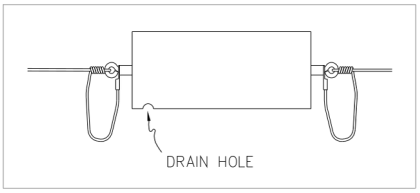


**Figure 2-1**

The antenna is comprised of the parts listed in Section 3. In summary, there is a mast assembly, two guy rope assemblies, a balun, a load, an element wire, a counterpoise wire and three ground stakes. Mechanical connections of the mast are made through aluminum sleeve and pins. Mechanical connections of the antenna wires are made with fireman snap type connectors. Electrical connections of the antenna are made with wing nut type fasteners.

### 2.3.1 Directional Setup

Step 1. Find a suitable centre point for the base of the mast. Thread the Ground Stake Ferrule Adaptor onto one of the Ground Rods. Ensure the 3/4-10 stainless steel bolt is fully threaded into the other end of the Adaptor. Drive the stake, approximately 1-1/2 feet into the ground using the supplied Club Hammer. Remove the Adaptor and thread on the Stake Mount Insulator.

Step 2. Walk out roughly 25 feet from the stake into any direction. Hammer a plastic peg into the ground at this point.

Step 3. Walk back to the stake and walk out another 25 feet in the opposite direction as the first time. Turn to the right by about 60 degrees and walk another 25 feet. Hammer the next peg into the ground at this point, ensuring it is still 25 feet from the stake.

Step 4. Repeat step 3 but turn to the left this time. There should now be three pegs located 120 degrees from each other on a 50 foot diameter circle.

Step 5. Determine the general direction the antenna needs to face. Walk out roughly 50 feet in this direction. Drive another Ground Stake into the ground at this point, using the Club Hammer and the Ground Stake Ferrule Adaptor. Remove the Adaptor and thread on a Ground Rod Ferrule Assembly. Clip the ground side of the Termination Load Resistor onto the insulator loop. The ground side is the side with two lead wires protruding from it. Insert the fork terminal under the thumb screw on top of the Ground Stake Ferrule and tighten.

Step 6. Clip one end of the “Element” wire onto the free side of the Termination Load Resistor. Join the fork terminal of the Element wire to the thumbscrew

assembly of the Load Resistor and tighten. Carefully unravel the spool of "Element" wire to its end, while passing across the centre stake.

Step 7. Place the 6th Mast Section onto the Stake Mount Insulator as a temporary holder. Thread the "Element" wire onto the loop at the top of this Mast Section. Clip the 3 Upper Guy Rope Assemblies onto the triangular Guy Rope Collar found on the 6th Mast Section. Unravel the 3 Upper Guy Rope Assemblies towards the pegs hammered into the ground in steps 2-4. Cinch the rope assemblies up about 7 feet and hook onto the pegs.

Step 8. Lift the 6th Mast Section off the Insulator Mount and slide the 5th Mast Section into the bottom of the 6th Section. Secure the two together with the pin.

Step 9. Lift the 5th/ 6th Mast assembly and insert the 4th Mast Section into the bottom of the 5th Mast Section and secure with the pin. Repeat for the 3rd Mast Section.

Step 10. Clip the 3 Lower Guy Rope Assemblies onto the triangular Guy Rope Collar found on the 3rd Mast Section. Unravel the 3 Lower Guy Rope Assemblies towards the pegs hammered into the ground in steps 2-4. Cinch the rope assemblies up about 7 feet and hook onto the pegs with the Upper Ropes.

Step 11. Carefully lift the 6th/ 5th/ 4th/ 3rd Mast assembly and insert the 2nd Mast Section into the bottom of the 3rd Mast Section. Secure the two together with the pin. Repeat for the 1st Mast Section.

Step 12. Place the 6 Mast Sections onto the Stake Mount Insulator and cinch up the six guy ropes until the mast sits tight and straight.

Step 13. Pull the Element Wire taught and repeat Step 5 except with the Balun Assembly. The ground side is the side with two lead wires protruding from it. Set the stake location so that the element wire is not under stress but is not drooping loose.

Step 14. In areas of poor or no ground, the "Counterpoise" wire may be necessary. This would be connected to the Fork Terminals found on the ground sides of the Termination Load Resistor and the balun. The antenna may work best with the one end of the counterpoise *not* connected to the ground side of the Termination Load Resistor. Try both to determine the best results for the specific installation. The counterpoise is essential in poor ground, dry soil, or above ground installations. Its length is not critical, and *does not* have to run directly under the antenna wire.

Step 15. Connect a suitable coaxial cable to the input connector of the Balun. Length is not critical, but it should be rated to easily handle the amount of power to be used and mate with a female N-type cable connector. The antenna is pre-tuned at the factory for an average VSWR of 1.4:1 with a maximum of 2.0:1, depending upon the frequency used and surrounding objects, ground conditions, etc. If you wish to optimize performance, experiment with the counterpoise and the grounds, taking VSWR readings as a guide.

### 2.3.2 Omni-Directional Setup

Step 1. Find a suitable centre point for the base of the mast. Thread the Ground Stake Ferrule Adaptor onto one of the Ground Rods. Ensure the 3/4-10 stainless steel bolt is fully threaded into the other end of the Adaptor. Drive the stake, approximately 1-1/2 feet into the ground using the supplied Club Hammer. Remove the Adaptor and thread on the Stake Mount Insulator.

Step 2. Walk out roughly 25 feet from the stake into any direction. Hammer a plastic peg into the ground at this point.

Step 3. Walk back to the stake and walk out another 25 feet in the opposite direction as the first time. Turn to the right by about 60 degrees and walk another 25 feet. Hammer the next peg into the ground at this point, ensuring it is still 25 feet from the stake.

Step 4. Repeat step 3 but turn to the left this time. There should now be three pegs located 120 degrees from each other on a 50 foot diameter circle.

Step 5. Walk out roughly 50 feet in any direction. Drive another Ground Stake into the ground at this point, using the Club Hammer and the Ground Stake Ferrule Adaptor. Remove the Adaptor and thread on a Ground Rod Ferrule Assembly.

Step 6. Place the 6th Mast Section onto the Stake Mount Insulator as a temporary holder. Hook one of the eyebolts from the Balun onto the Loop at the top of the 6th Mast Section so that the balun sits with the connector pointing downward. Clip the 3 Upper Guy Rope Assemblies onto the triangular Guy Rope Collar found on the 6th Mast Section. Unravel the 3 Upper Guy Rope Assemblies towards the pegs hammered into the ground in steps 2-4. Cinch the rope assemblies up about 7 feet and hook onto the pegs.

Step 7. Hook one end of the “Element” Wire to the free eyebolt of the Balun. Join the Fork Terminal to the Thumb Screw Assembly and tighten. Unravel the Element wire carefully towards the ground stake installed in Step 5. Install the Element Wire into the snap found on the end of the insulator assembly of the Ground Stake and continue unravelling the Element wire back towards the centre Stake Mount.

Step 8. Hook one end of the “Counterpoise” Wire to the loop at the top of the 6th Mast Section. Join the Fork Terminal to the Thumb Screw Assembly. Unravel the Counterpoise wire carefully in the opposite direction as the Element wire, roughly 50 feet. Temporarily drive the last Ground Stake into the ground and again loop the Wire through the snap on the end of the Insulator found on the Stake Mount Ferrule Assembly. Continue unravelling the Counterpoise wire back towards the centre Stake Mount.

Step 9. Join the two Wires with the Termination Load Resistor between them. Connect the fork Terminals on the wires to the Thumbscrew Assemblies on the Load Resistor.

Step 10. Connect the RF feed cable to the input connector of the Balun.

Step 11. Lift the 6th Mast Section off the Insulator Mount and slide the 5th Mast Section

into the bottom of the 6th Section. Secure the two together with the pin. Also, secure the coax cable to the mast with the attached "Hook & Loop" strap.

Step 12. Lift the 5th/ 6th Mast assembly and insert the 4th Mast Section into the bottom of the 5th Mast Section and secure with the pin. Repeat for the 3rd Mast Section.

Step 13. Clip the 3 Lower Guy Rope Assemblies onto the triangular Guy Rope Collar found on the 3rd Mast Section. Unravel the 3 Lower Guy Rope Assemblies towards the pegs hammered into the ground in steps 2-4. Cinch the rope assemblies up about 7 feet and hook onto the pegs with the Upper Ropes.

Step 14. Carefully lift the 6th/ 5th/ 4th/ 3rd Mast assembly and insert the 2nd Mast Section into the bottom of the 3rd Mast Section. Secure the two together with the pin. Repeat for the 1st Mast Section.

Step 15. Place the 6 Mast Sections onto the Stake Mount Insulator and cinch up the six guy ropes until the mast sits tight and straight.

Step 16. Return to the temporary Ground Stake and remove from the ground while all wires are still attached. Pull the Counterpoise Wire taught and re-drive the Ground Stake into the ground in such a way that the wires are tight enough to keep the Load Resistor off the ground but not so tight that the Mast is stressed.

Step 17. Connect a suitable coaxial cable to the input connector of the Balun. Length is not critical, but it should be rated to easily handle the amount of power to be used and mate with a female N-type cable connector. The antenna is pre-tuned at the factory for an average VSWR of 1.4:1 with a maximum of 2.0:1, depending upon the frequency used and surrounding objects, ground conditions, etc. If you wish to optimize performance, experiment with the counterpoise and the grounds, taking VSWR readings as a guide.

# 3.0 PARTS LIST

## 3.1 General

A list of parts as supplied with the Sloping Vee Antenna System appears in Table 3.1. Corresponding Illustrations can be found on the following page in Figure 3-1.

**Table 3.1** List of Parts for the Sloping Vee Antenna System

| Item | Part Number | Description | Qty |
|---|---|---|---|
| 1 | VD-99-00192-1 | Balun Resistive Load Element Wire | 1 ea |
| 2 | VD-99-00190-1 | Counterpoise Ground Stake Stake | 1 ea |
| 3 | VC-11-00185-1 | Mount Insulator Ferrule/Insulator Assy | 1 ea |
| 4 | VC-11-00185-2 | Hammer Adaptor with 3/4-10 SST Bolt | 1 ea |
| 5 | VC-95-00008-1 | Mast Section #1 Mast Section #2 Mast | 3 ea |
| 6 | VC-11-00177-1 | Section #3 Mast Section #4 Mast | 1 ea |
| 7 | VC-11-00183-1 | Section #5 Mast Section #6 Lower Guy | 2 ea |
| 8 | VB-95-00005-1 | Rope Assy Upper Guy Rope Assy Peg | 1 ea |
| 9 | VD-11-00175-1 | 2 lb Club Hammer Technical Manual | 1 ea |
| 10 | VD-11-00175-2 | | 1 ea |
| 11 | VD-11-00175-3 | | 1 ea |
| 12 | VD-11-00175-4 | | 1 ea |
| 13 | VD-11-00175-5 | | 1 ea |
| 14 | VD-11-00175-6 | | 1 ea |
| 15 | VD-11-00180-1 | | 3 ea |
| 16 | VD-11-00181-1 | | 3 ea |
| 17 | VD-11-00172-11 | | 3 ea |
| 18 | VD-11-00172-12 | | 1 ea |
| 19 | VTM-00-009C | | 1 ea |

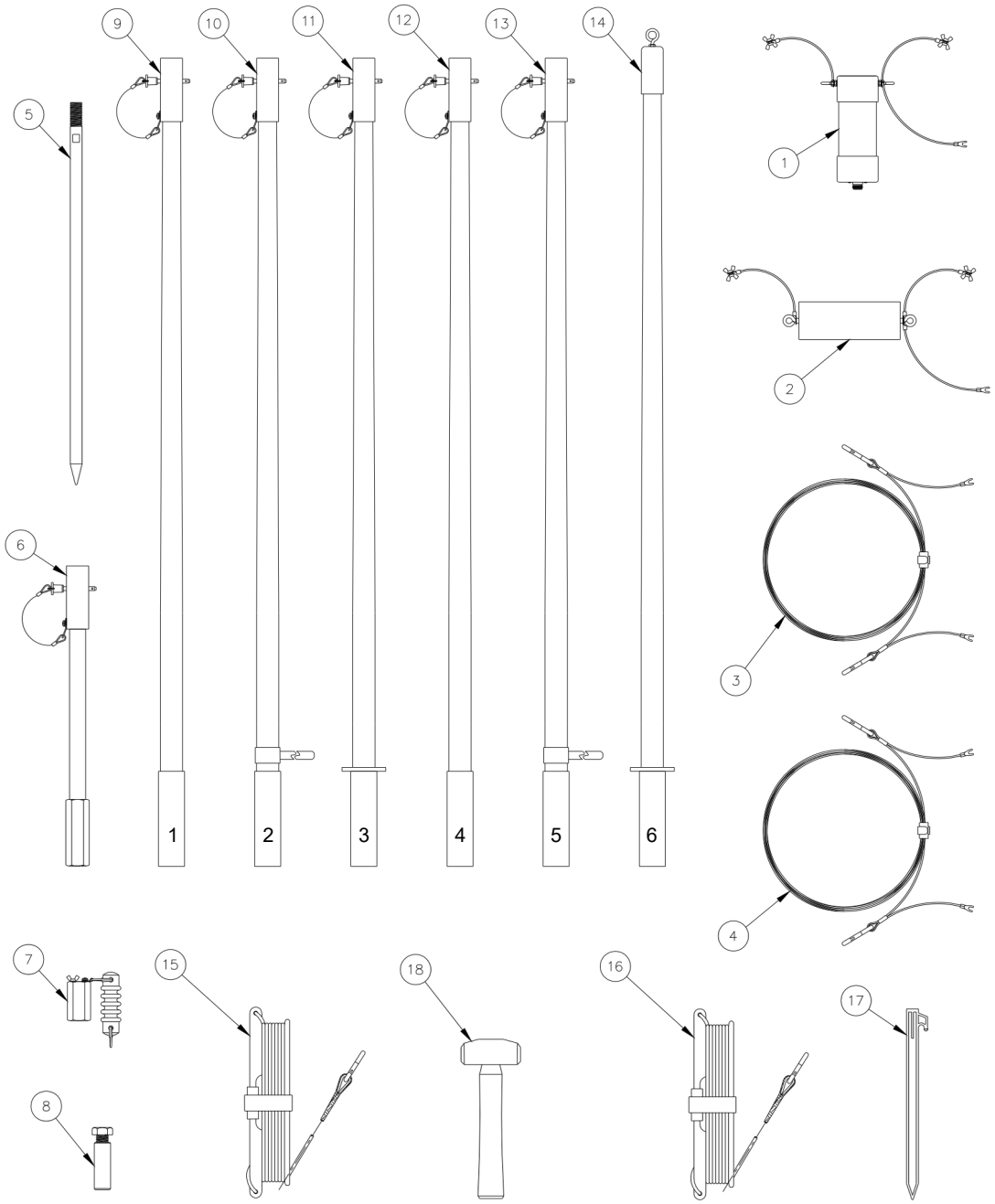


**Figure 3-1** Illustration of items in Table 3.1

# 4.0 QUICK REFERENCE DATA

## 4.1 General

Quick reference engineering data and illustrations for use during planning and installation of the Sloping Vee Antenna are presented on the following pages.

Figure 4.1 - 4.4; Recommended Directional Installation scheme.
Figure 4.5 - 4.8; Recommended Omni-Directional Installation scheme.
Figure 4.9; Typical VSWR plot.

## 4.2 Manufacturer's Address

| **Postal address:** |
| --- |
| Valcom ManufacturingGroup,Inc<br>P.O. Box 603<br>Guelph, Ontario<br>Canada<br>N1H 6L3 |

| **Shipping address:** |
| --- |
| Valcom Manufacturing Group, Inc<br>175 Southgate Drive<br>Hanlon Industrial Park<br>Guelph, Ontario<br>Canada<br>N1G 3M5 |

Phone: 519-824-3220
Fax: 519-824-3411
e-mail: enquiries@valcom-guelph.com
Web: www.valcommfg.ca

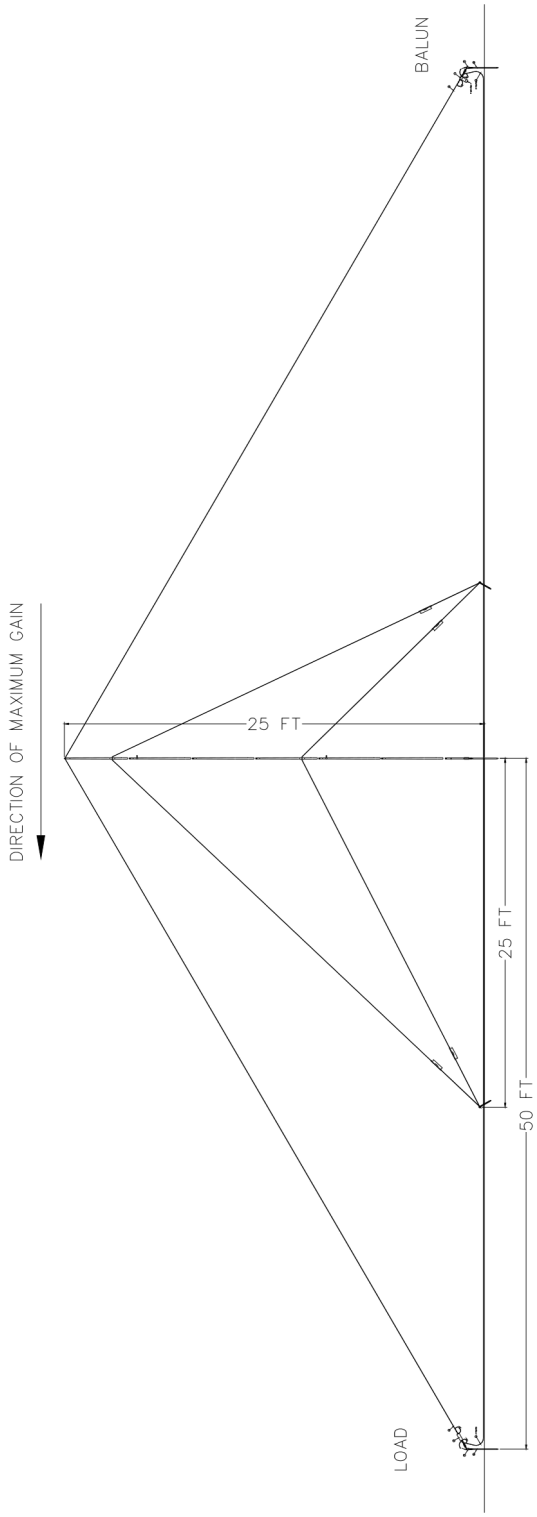


**Figure 4-1** Recommended Directional Configuration

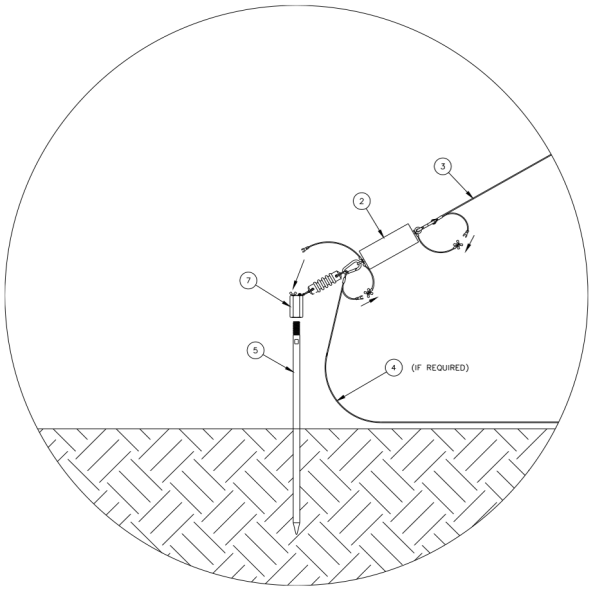


**Figure 4-2** Detail of Load Connection

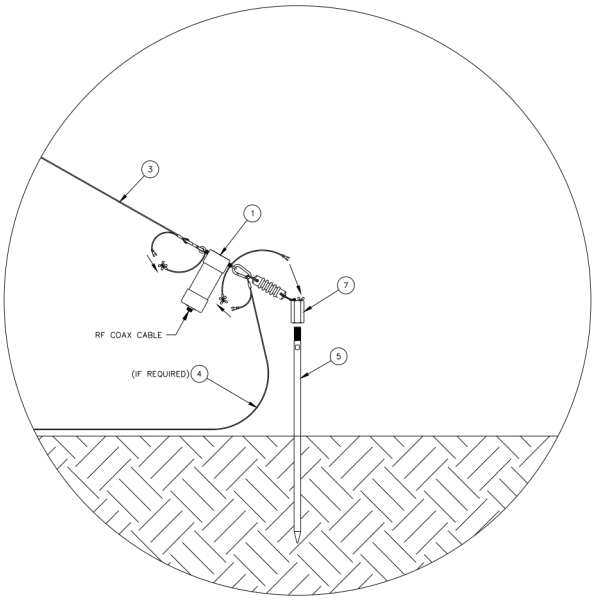


**Figure 4-3** Detail of Balun Connection

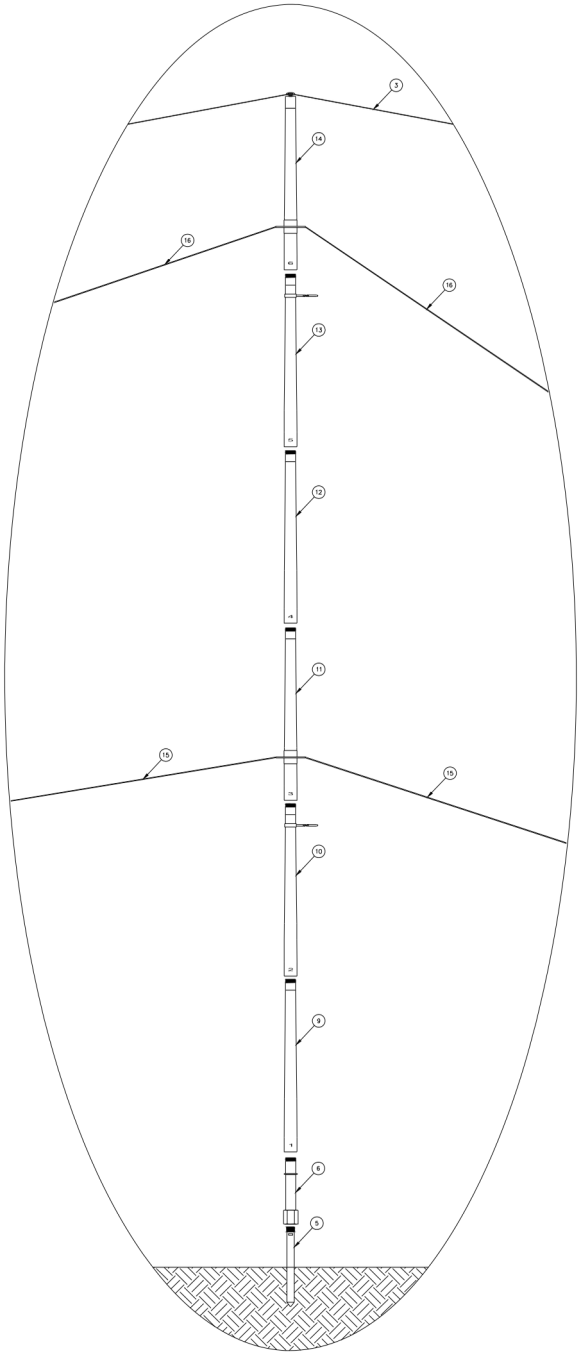


**Figure 4-4** Detail of Mast Assembly

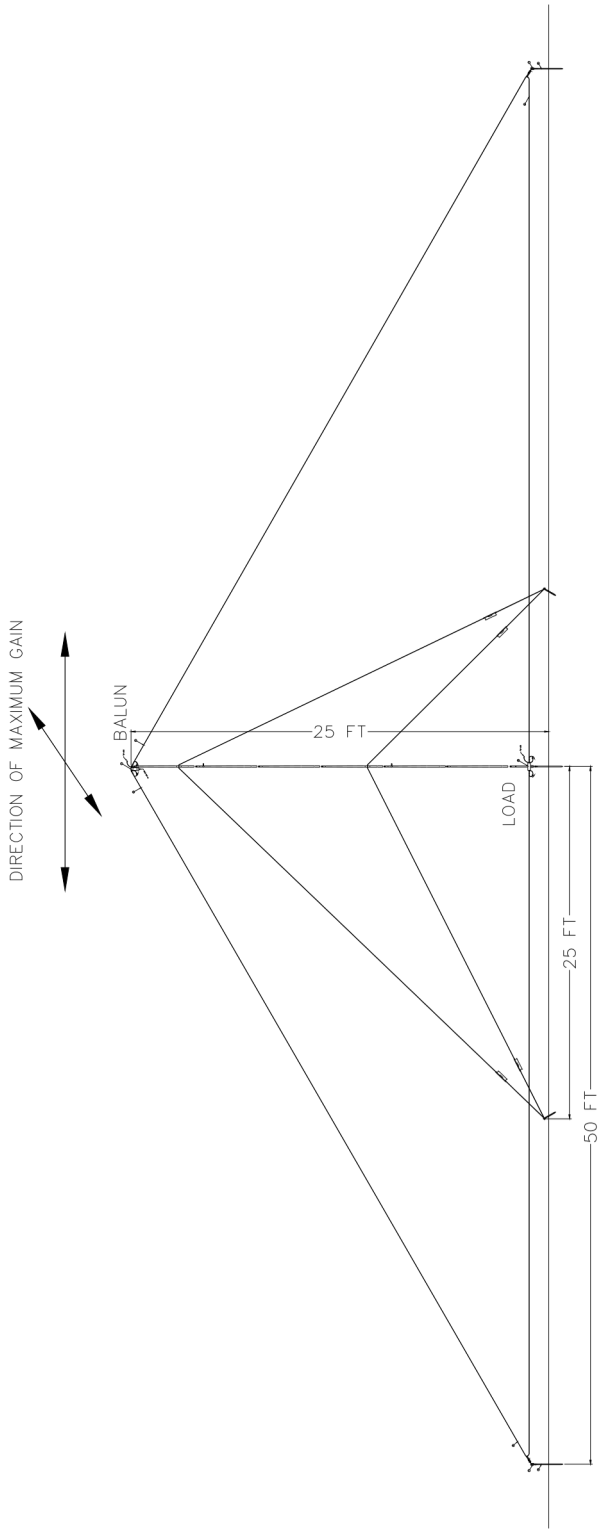


**Figure 4-5** Recommended Omni-Directional Construction

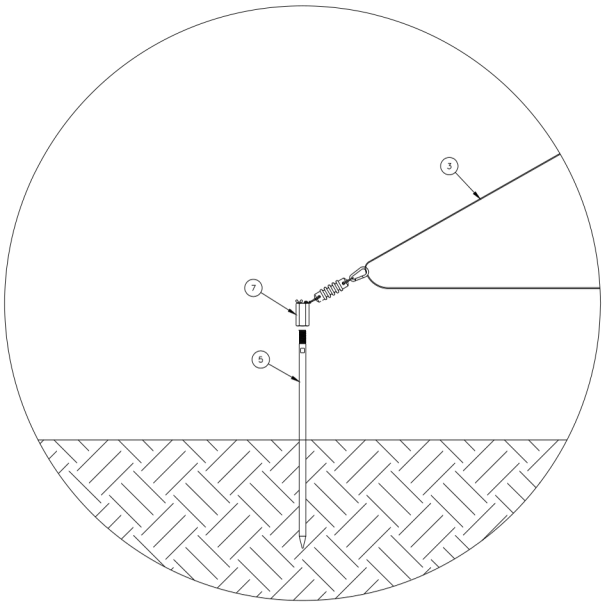


**Figure 4-6** Detail of Insulator Connection

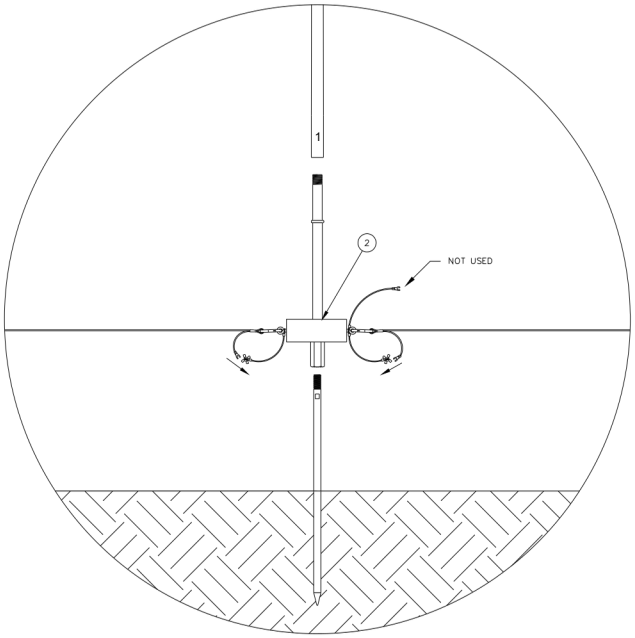


**Figure 4-8** Detail of Load Connection

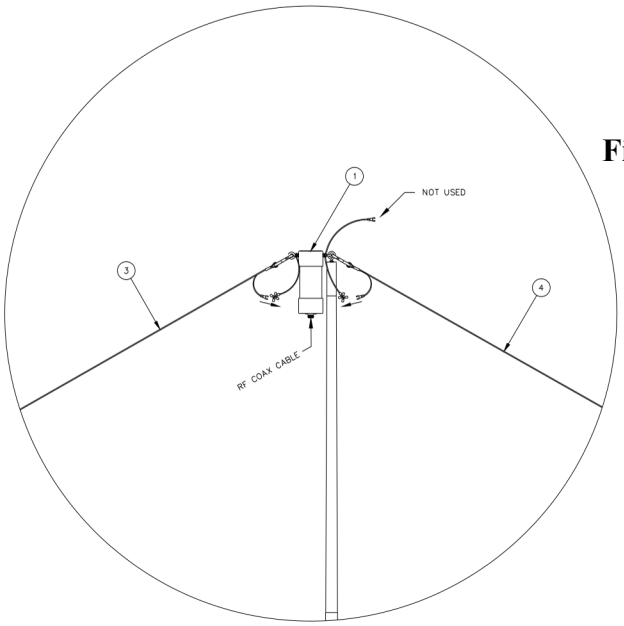


**Figure 4-7** Detail of balun Connection

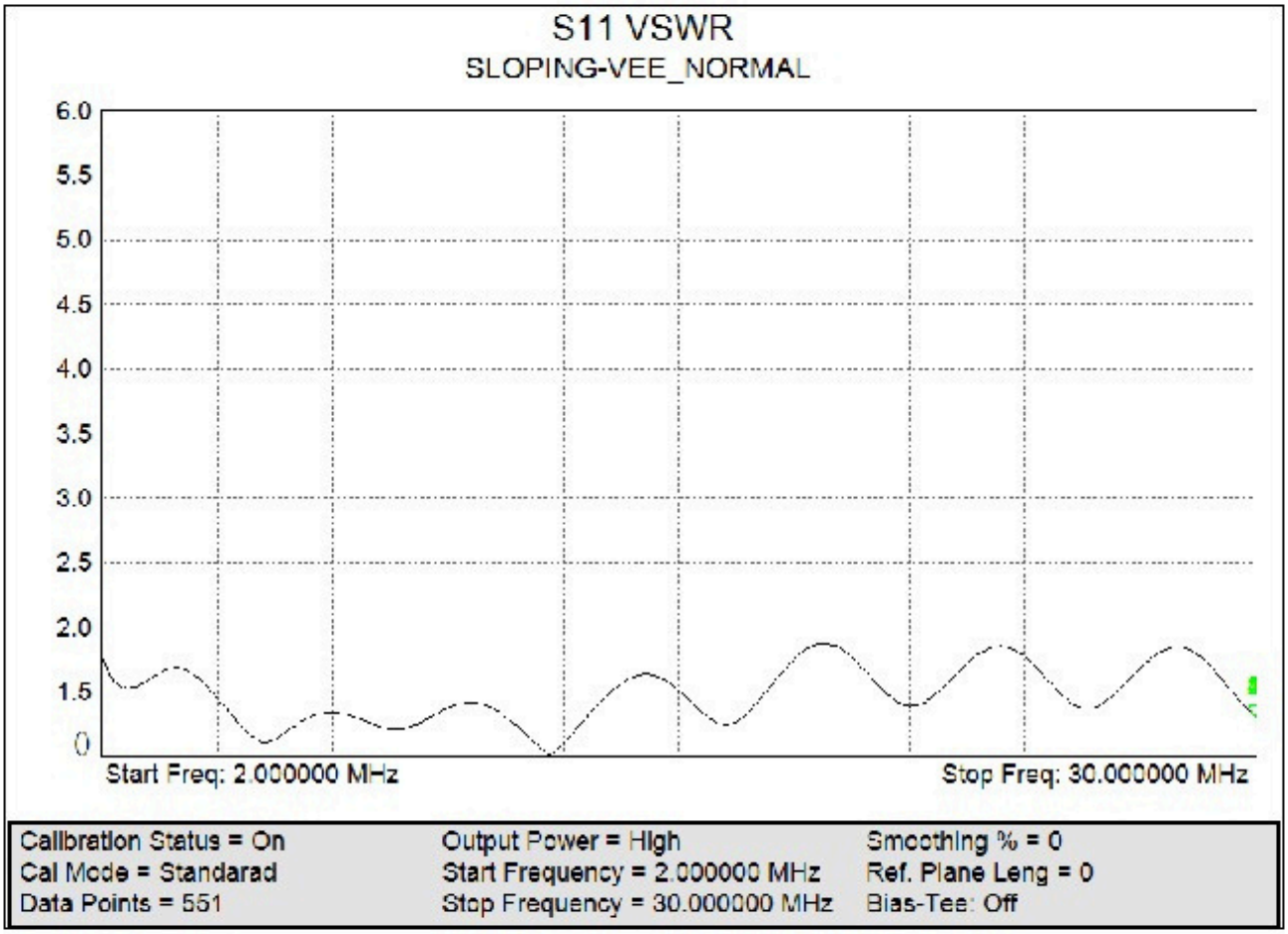
S11 VSWR
SLOPING-VEE_NORMAL
6.0
5.5
5.0
4.5
4.0
3.5
3.0
2.5
2.0
1.5
0
Start Freq: 2.000000 MHz
Stop Freq: 30.000000 MHz
Calibration Status = On
Cal Mode = Standarad
Data Points = 551
Output Power = High
Start Frequency = 2.000000 MHz
Stop Frequency = 30.000000 MHz
Smoothing % = 0
Ref. Plane Leng = 0
Bias-Tee: Off

**Figure 4-9**